Pfister
FAUCETS

# Verve™
LG49-VRV1

*8" - 15" Widespread Faucet*
*Grifo de largo alcance de 8 a 15 pulgadas*
*Robinet Élongé de 8 à 15 po.*

# Maintenance & Care Guide
# Guía de Mantenimiento y Cuidado
# Guide d'Entretien et Soin

WaterSense Meets EPA Criteria
Certified by IAPMO R&T

**Maintenance Support • Soporte de Mantenimiento • Soutien à la Entretien**

**For Warranty & Care Information or Ordering Replacement Parts:**

Para información sobre la garantía y el mantenimiento o para ordenar piezas de repuesto:

Pour renseignements sur la garantie et l'entretien ou pour commander des pièces de rechange:

**1-800-PFAUCET (732-8238)**
**pfisterfaucets.com/support**

Installation Videos Available
Videos de instalación a disposición
Vidéos d'installation disponibles

*pfisterfaucets.com/videos*

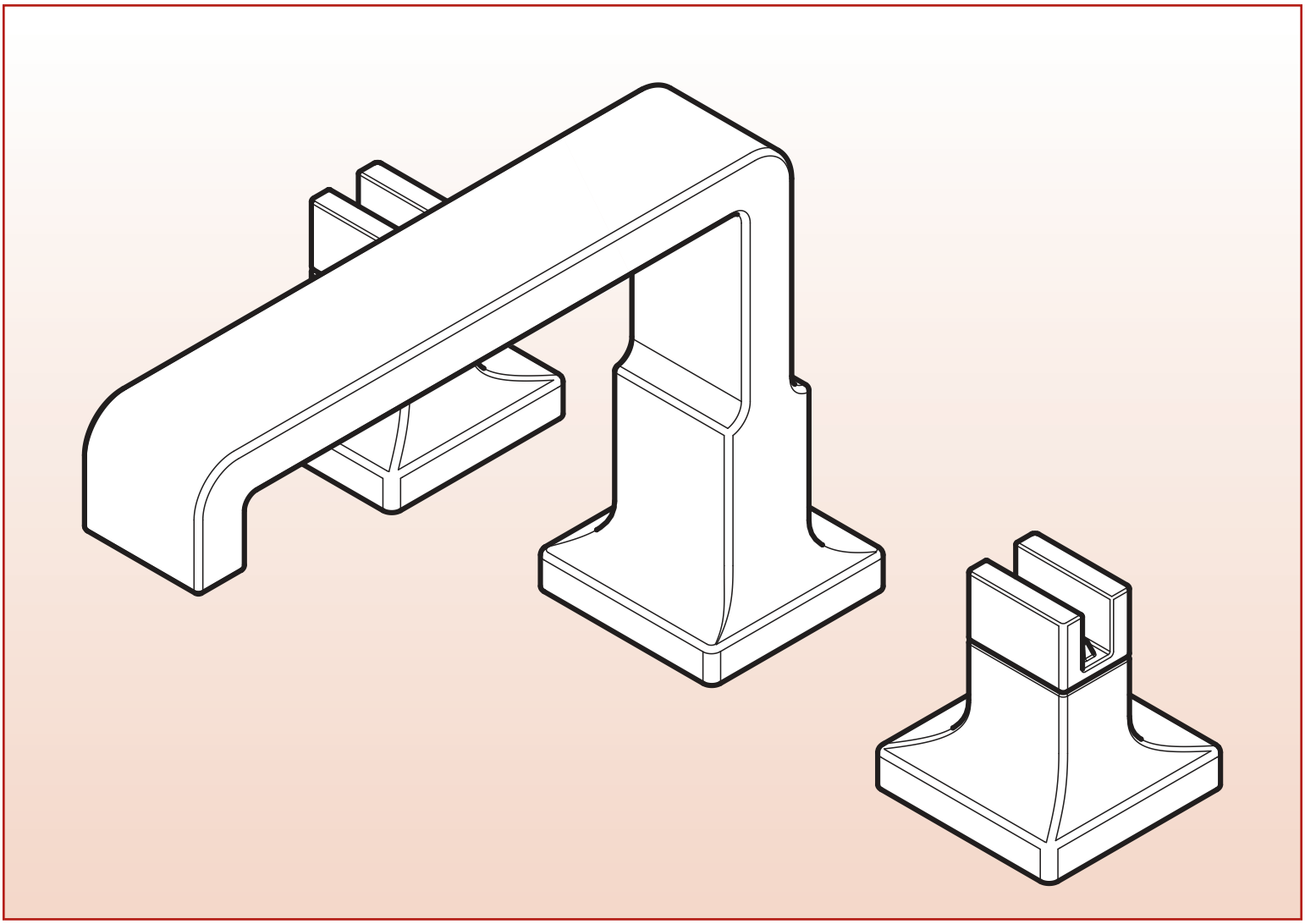

Copyright © 2025, Pfister Faucets, an ASSA ABLOY Group company. All rights reserved.
Reproduction in whole or in part without the express permission of Pfister Faucets is prohibited.

# LG49-VRV1 • Parts Explosion • Hoja de Piezas • Vue Éclatée des Pièces

**Handle Options**
**Opción de manija • Option de poignée**

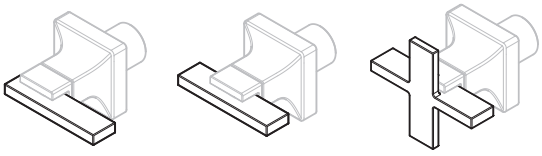

HHL-VRVL* HHL-VRVT* HHL-VRVX*

**call • llama • appel :**
**1-800-732-8238**




| | English | Español | Français |
|---|---|---|---|
| * | Replace * with Finish Letter | Sustitue * con la letra de acabado | Remplace * avec la lettre de finition |
| A | Polished Chrome | Cromo Pulido | Chrome Poli |
| B | Matte Black | Negra Mate | Noir Mat |
| BG | Brushed Gold | Oro Cepillado | Or Balayé |
| D | PVD Polished Nickel | PVD Niquel Pulido | PVD Nickel Poli |
| J | Brushed Nickel | Níquel Cepillado | Nickel Brossé |

**If installation surface depth is thicker than 2", order Valve Extension Kit 900-072 / 900-073 .**
Si la profundidad superficie del fregadero es más gruesa que 51mm, por favor pida la pieza de repuesto 900-072 / 900-073.
Si la profondeur de la surface de montage est plus épaisse que 51mm, SVP commandez le kit d'extension 900-072 / 900-073.

# Maintenance & Care • Mantenimiento y Cuidado • Entretien et Soin

**Turn off water supplies and relieve pressure before working on your faucet!**

¡Cierre los suministros de agua y alivie la presión antes de trabajar en el grifo!

Fermez les arrivées d'eau et dépressurisez avant de travailler sur le robinet !

## Cartridge Removal
### Retiro del Cartucho
### Retirage de la Cartouche

**IMPORTANT: do not disassemble cartridge unit.**

IMPORTANTE: no desensamble la unidad del cartucho.

IMPORTANT : ne pas démonter la cartouche.

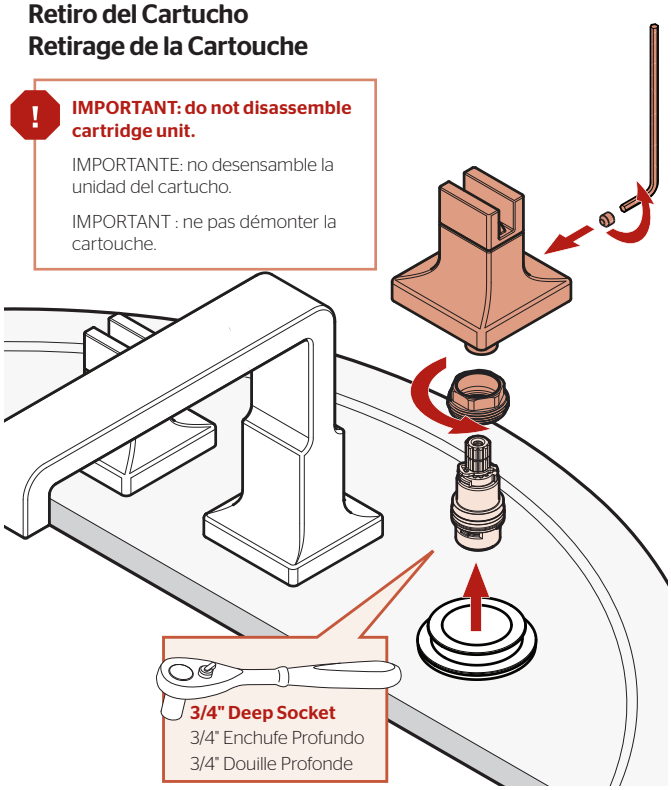


## Spout Connector Removal
### Extracción del conector de grifo
### Retrait du connecteur robinet

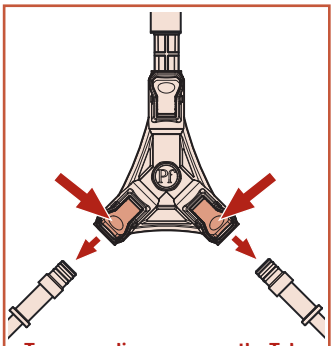

**To remove lines, press on the Tabs and pull lines down.**

Para quitar las líneas, presionar en las lengüetas y tirar hacia abajo las líneas.

Pour retirer les lignes, pressez sur les onglets et tirez les lignes vers le bas.

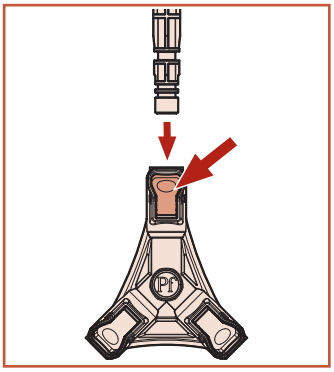

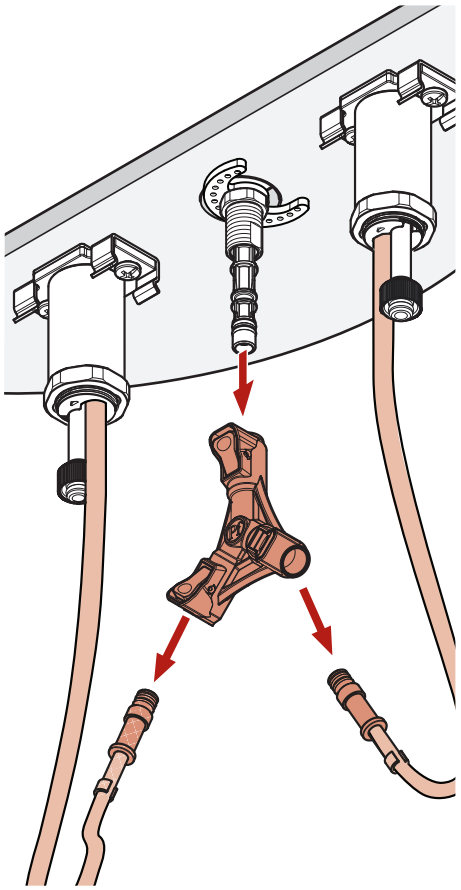

## English

**Cleaning Instructions:**

For all handles and decorative finishes, use only a soft damp cloth to clean and shine. Use of polish, detergents, abrasive cleaners, organic solvents or acid may cause damage. Use of anything other than a soft damp cloth will nullify the warranty.

## Español

**Instrucciones para limpieza:**

Para las manijas y acabados decorativos, utilice únicamente un paño suave mojado para limpiar y pulir. El uso de pulimento, detergente, limpiadores abrasivos, solventes orgánicos o ácido puede ocasionar daños. El uso de cualquier otro método de limpieza distinto de un paño húmedo anulará la garantía.

## Français

**Instructions de nettoyage:**

Pour toutes les poignées et les finis décoratifs, utilisez seulement un chiffon doux humide pour nettoyer et faire briller. L'utilisation des pâtes à polir, de détergents, de nettoyants abrasifs, de solvants organiques ou acides peuvent causer des dommages. Utiliser autre chose qu'un chiffon doux humide annule la garantie.

**For Warranty & Care Information or Ordering Replacement Parts:**

Para información sobre la garantía y el mantenimiento o para ordenar piezas de repuesto:

Pour les renseignements sur la garantie et l'entretien ou pour commander des pièces de rechange:

Pfister Faucets

**1-800-PFAUCET (732-8238)**
**pfisterfaucets.com**

# PFISTER ® LIFETIME LIMITED WARRANTIES

## Lifetime Limited Warranties – Residential

**Mechanical Limited Warranty:** Except as otherwise provided below, ASSA ABLOY Americas Residential Inc., for its Pfister brand products ("Pfister"), warrants to the original residential purchaser that their Pfister product (the "Product," excluding the electronic sensor, control box, power unit, GE filter manifold and GE filter cartridges) will be free of all defects in materials and workmanship that would impair the intended and proper use of the Product for the lifetime of the Product, and the "lifetime" of the Product shall be from the date of purchase for as long as the original purchaser occupies the residential premises in which the Product was originally installed.

**Electrical Component Limited Warranty:** Except as otherwise provided below, for electrical components, including the electronic sensor, control box and power unit (battery pack or AC adapter), Pfister warrants to the original residential purchaser that the electrical components of their Product will be free of all defects in materials and workmanship for the lifetime of the Product, and the "lifetime" of the Product shall be for a period of five (5) years from the date of purchase, as long as the original purchaser occupies the residential premises in which the Product was originally installed.

**GE Filter Manifold and Cartridges Limited Warranty**: Except as otherwise provided below, for GE filter manifold and cartridges, Pfister warrants to the original residential purchaser that their Product will be free of all defects in materials and workmanship for the lifetime of the Product, and the "lifetime" of the Product shall be for a period of one (1) year from the date of purchase for the GE filter manifold and thirty (30) days from the date of purchase for the GE filter cartridges, as long as the original purchaser occupies the residential premises in which the Product was originally installed.

**Finish Limited Warranty**: Except as otherwise provided below, Pfister warrants to the original residential purchaser against deterioration of the Product's finish for the lifetime of the Product, and the "lifetime" of the Product shall be from the date of purchase for as long as the original purchaser occupies the residential premises in which the Product was originally installed.

## Lifetime Limited Warranties – Commercial

**Mechanical Limited Warranty:** Except as otherwise provided below, if the Product is installed in a commercial application, Pfister warrants to the original commercial purchaser that their Product will be free of all defects in materials and workmanship that would impair the ordinary and proper use of the Product for the lifetime of the Product, and the "lifetime" of the Product shall be limited to a period of ten (10) years from the date of purchase, as long as the original purchaser owns the commercial premises in which the Product was originally installed.

**Electrical Component Limited Warranty:** Except as otherwise provided below, if the Product is installed in a commercial application, Pfister warrants to the original commercial purchaser that the electrical components of their Product will be free of all defects in materials and workmanship for the lifetime of the Product, and the "lifetime" of the Product shall be limited to a period of three (3) years from the date of purchase, as long as the original purchaser owns the commercial premises in which the Product was originally installed.

**GE Filter Manifold and Cartridges Limited Warranty:** Except as otherwise provided below, if the Product is installed in a commercial application, Pfister warrants to the original commercial purchaser that their Product will be free of all defects in materials and workmanship for the lifetime of the Product, and the "lifetime" of the Product shall be limited to a period of one (1) year from the date of purchase for the GE filter manifold, and a period of thirty (30) days from the date of purchase for the GE filter cartridges, as long as the original purchaser owns the commercial premises in which the Product was originally installed.

**Finish Limited Warranty:** Except as otherwise provided below, if the Product is installed in a commercial application, Pfister warrants to the original commercial purchaser against material deterioration of the Product's finish for the lifetime of the Product, and the "lifetime" of the Product shall be limited to a period of ten (10) years from the date of purchase, as long as the original purchaser owns the commercial premises in which the Product was originally installed.

**Authorized Sellers:** These residential and commercial warranties apply only to Products purchased from Pfister or a Pfister authorized seller, unless otherwise prohibited by law. Pfister Products are legitimately sold only by authorized sellers who are required to follow Pfister's policies, procedures, and quality control standards. Pfister reserves the right to reject warranty claims from purchasers for Products purchased from unauthorized sellers, including unauthorized Internet sites. If you have any questions about whether a seller is authorized, please contact us at 1-800-Pfaucet (1-800-732-8238).

## Exclusions from Warranties

Pfister produces all Products in accordance with Pfister's institutional quality control standards. However, the Products are susceptible to indentation and imperfections due to specific processes, malleability of the materials, and the elements of human intervention during manufacture. Although our internal safeguards protect us against shipping Products of unacceptable quality, an imperfection or surface blemish may be considered the highest quality standard obtainable on a particular Product. All final decisions of quality remain exclusively in the discretion of Pfister.

**Conditions that are not covered by these warranties include:**

1. Any Pfister Product installed prior to January 1, 1997 is not covered bythese warranties.

2. Any Pfister Product which has been damaged as a result of installationcontrary to any of Pfister's written installation instructions is not covered by these warranties.

3. Any Pfister Product which has been modified by any non-Pfister componentis not covered by these warranties.

4. Any Pfister Product having a defect caused by neglect, misuse, abuse, orunreasonable or extraordinary use, or improper maintenance or repair, oraccidents or acts of God, is not covered by these warranties.

5. Any Pfister Product having a defect due to use of paints, solvents, or otherchemicals is not covered by these warranties.

6. Any Pfister Product that is used in combination with assemblies, aerators,cartridges, handles, hoses, spouts, or any other component other than thosemanufactured by Pfister and designated for use with the applicable Product isnot covered by these warranties.

7. Any Pfister Product that was purchased from an unauthorized seller is notcovered by these warranties.

These warranties are not transferable. Except as otherwise stated herein, ifthere are any differences between these warranties and warranties printed inmarketing or other Product materials, these warranties shall control.

## Warranty Claims

Any Product believed to be defective as covered by these warranties may not be returned for warranty service without prior authorization from Pfister. Purchasers who wish to make a warranty claim based upon a Product defect must contact Pfister within thirty (30) days from the date of discovery of the alleged defect(s). In order to notify Pfister and receive assistance or service under these warranties, you may: (1) speak with a consumer service representative by calling 1-800-Pfaucet (1-800-732-8238), or (2) write to the Consumer Service Department c/o ASSA ABLOY Americas Residential Inc., 19701 DaVinci, Lake Forest, CA 92610, and include a description of the claimed defect, model number, your name, address, phone number, and a dated proof of purchase, or (3) email Pfister's customer service department by going to www.pfisterfaucets.com, or (4) notify the location or distributor from which the Product was purchased.

Please note that, for all warranty claims, you will be required to provide a description of any claimed defect(s) and a dated proof of purchase from Pfister or the Pfister authorized seller to verify warranty eligibility. Pfister reserves the right to request other information and evidence reasonably required to verify warranty eligibility and, if requested, you must permit inspection of the Product by Pfister or its representatives. If, after investigation, Pfister honors the warranty claim, the remedy will be performed by or on behalf of Pfister in accordance with the below heading, "Remedies." Please note that Products may not be returned to Pfister without prior authorization from Pfister. If authorized by Pfister, you will need to mail your Product to ASSA ABLOY Americas Residential Inc., 19701 DaVinci, Lake Forest, CA 92610.

## Remedies

For certain claimed defect(s) covered by these warranties, as determined by Pfister, Pfister will provide you with troubleshooting steps. For other claimed defect(s) covered by these warranties, as determined by Pfister, Pfister will replace the defective Product or part. If a Pfister Product, which is the same

PFISTER® LIFETIME LIMITED WARRANTIES

as the Pfister Product or any part covered by these warranties, has been discontinued at the time of replacement or if Pfister determines, in its sole discretion, that such replacement is inappropriate, Pfister reserves the right to substitute an alternative product. Pfister also reserves the right to accept or reject an alternative product proposed as a replacement, when the value is higher than that of the Product originally purchased by the purchaser. Except as expressly provided in these warranties to the contrary, PFISTER SHALL NOT BE OBLIGATED OR LIABLE FOR LABOR CHARGES OR OTHER CHARGES RELATED TO INSTALLATION, REPAIR OR REPLACEMENT OF A PFISTER PRODUCT, OR FOR LOSS OF, OR DAMAGE TO, ANY MATERIAL WHICH IS NOT SOLD BY PFISTER.

## Limitation of Liabilities

THERE ARE NO EXPRESS OR IMPLIED WARRANTIES THAT EXTEND BEYOND THOSE STATED HEREIN. ANY IMPLIED WARRANTIES THAT MAY BE APPLICABLE TO PRODUCTS, INCLUDING IMPLIED WARRANTIES OF MERCHANTABILITY OR FITNESS FOR A PARTICULAR PURPOSE, ARE LIMITED IN DURATION TO THE DURATION OF THIS WARRANTY. SOME STATES DO NOT ALLOW LIMITATIONS ON HOW LONG AN IMPLIED WARRANTY LASTS, SO THE ABOVE LIMITATION MAY NOT APPLY TO YOU. UNDER NO CIRCUMSTANCES SHALL PFISTER BE LIABLE FOR ANY SPECIAL, INCIDENTAL, OR CONSEQUENTIAL DAMAGES BASED UPON BREACH OF THIS LIMITED WARRANTY, BREACH OF CONTRACT, OR STRICT LIABILITY. SOME STATES DO NOT ALLOW THE EXCLUSION OR LIMITATION OF INCIDENTAL OR CONSEQUENTIAL DAMAGES, SO THE ABOVE LIMITATION OR EXCLUSION MAY NOT APPLY TO YOU. THIS WARRANTY GIVES YOU SPECIFIC LEGAL RIGHTS, AND YOU MAY ALSO HAVE OTHER RIGHTS WHICH VARY FROM STATE TO STATE.

Effective Date: January 30, 2025

Copyright © 2025, Pfister Faucets, an ASSA ABLOY Group company. All rights reserved.
Reproduction in whole or in part without the express permission of Pfister Faucets is prohibited.